Aim: Study of OPerational AMPlifier (OPAMP) as inverting and non-inverting amplifier and its applications as adder and subtractor.

Electronic Parts Required:

(i) Power supply, 2 Nos : ± 15 V , 0 ~ +5 V (use pot for variable voltage from fixed if not available)
(ii) R_f = 2.2 KΩ, 10 KΩ, 22 KΩ, one each 3 Nos
(iii) R_i = 1.0 KΩ , 4 Nos
(iv) 1.0 kΩ Potentio-meter, 1.0 W , 2 Nos
(v) OPAMP LM741 = 1 No
(vi) Breadboard = 1 No
(vii) Two DT-830D multi-meters for voltage measurements.
(viii) single strand wires = 6 - 8 Nos.

Introduction: An **operational amplifier**, which is often called an **op-amp**, is a DC-coupled high-gain electronic voltage amplifier with differential inputs and, usually, a single output. High input impedance at the input terminals (ideally infinite) and low output impedance (ideally zero) are important typical characteristics.

Circuit notation:

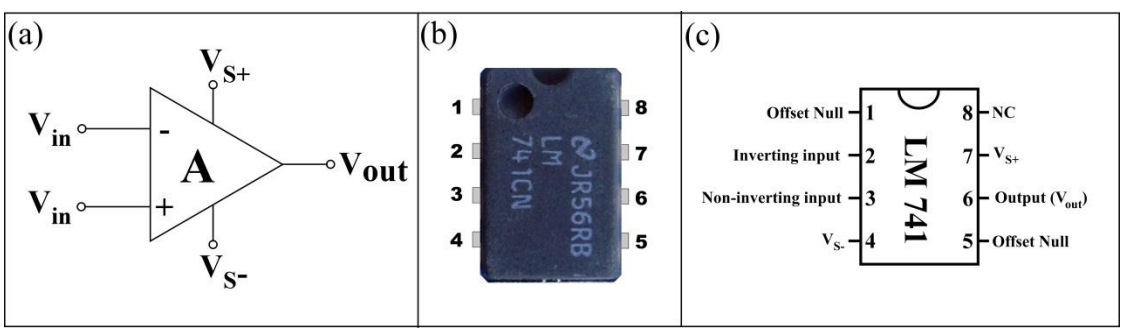

Figure 1: *(a) Symbolic representation of OPAMP (b) Real 8-pin OPAMP showing how to count pin numbers (c) Detail pin-out configuration of LM 741 OPAMP.*

The circuit symbol for an op-amp is shown in Fig 1(a), where:

- V_{in}: Non-inverting input voltage
- V_{in}: Inverting input voltage
- V_{out}: Output voltage
- V_{S+}: positive power supply = + 15 V
- V_{S-}: negative power supply = - 15 V

The power supply pins (V_{S+} and V_{S-}) can be labeled in different ways. Despite different labeling, the function remains the same - to provide additional power for amplification of signal. Often these pins are left out of the diagram for clarity, and the power configuration is described or assumed from the circuit. The standard pin diagram of LM 741 OpAmp is also shown in Fig 1(c).

Properties of OPAMP 741:

- The input stage of an OPAMP is a *differential amplifier (DA)* and the output stage is typically a class AB push-pull emitter follower amplifier.
- The internal stages of an OPAMP are *direct-coupled* i.e no coupling capacitors are used. The direct coupling allows the OPAMP to amplify DC as well as AC signals.
- An OPAMP has *very high input impedance* (ideally infinite) and *very low output impedance* (ideally zero). The effect of high input impedance is that the amplifier will draw a very small current (ideally zero) from the signal source. The effect of very low output impedance is that the amplifier will provide a constant output voltage independent of current drawn from the source.
- An OPAMP has very high "*open-loop voltage gain*" (ideally infinite); typically more than 10^5 or10^6.
- The OPAMP is almost always operated with *negative feedback*.

Application of OPAMP 741:

The OPAMPs have many practical applications. The OPAMP can be connected in a large number of circuits to provide various operating characteristics.

(1) OPAMP as an Inverting Amplifier:

An operational amplifier can be operated as an inverting amplifier as shown in the figure. Biasing supply to OPAMP, $V_{s\pm} = \pm 15$ V must be applied. Use variable power supply to tune V_{in}. If variable voltage not available then one can use 1K pot from fixed voltage to get variable voltage.

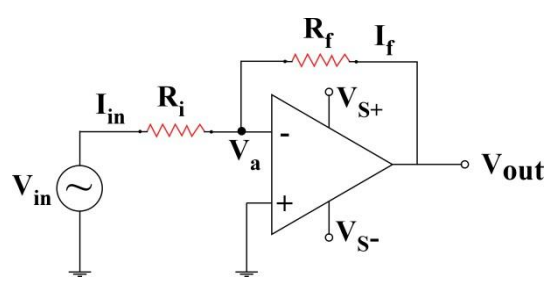

Inverting voltage gain, $A = \frac{V_{out}}{V_{in}} = -\frac{R_f}{R_i}$

Table 1: [R_f = 2.2 KΩ, 10 KΩ, 22 KΩ, R_i = 1.0 KΩ , 2.2 KΩ]

S. N.	Input voltage, V_{in} (volt)	Output voltage, V_{out} (volt)	Measured Gain (V_o/V_{in})	Average measured Gain	Gain (R_f/R_i) (theory.)
1					
2					
--					
5					

Use different combination of R_f and R_i to find out different gain of OPAMP. At least do experiment for 4 different Gain of OPAMP. Keep output voltage less than 15.0 V (saturation voltage).

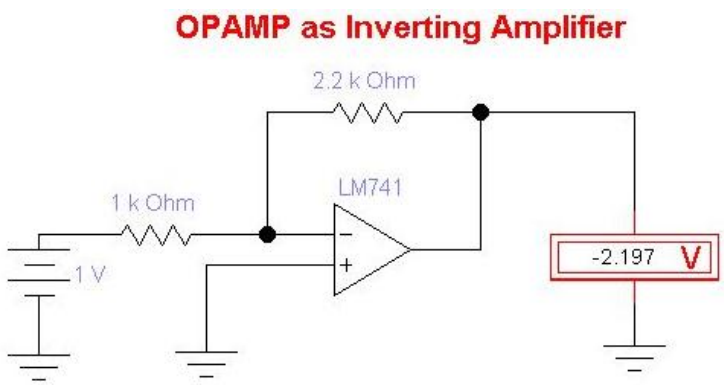

(2) OPAMP as a Non-inverting Amplifier:

An operational amplifier can be operated as a non-inverting amplifier as shown in the figure. Use variable power supply to tune V_{in}. If variable voltage not available then one can use 1K pot from fixed voltage to get variable voltage.

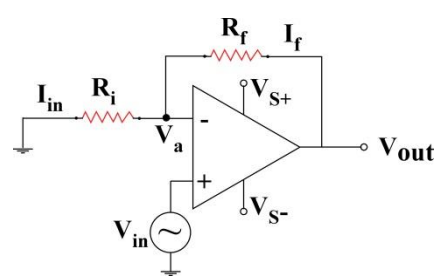

Non-inverting voltage gain, $A = \frac{V_{out}}{V_{in}} = \frac{R_f + R_i}{R_i} = 1 + \frac{R_f}{R_i}$

Table 2: [R_f = 2.2 KΩ, 10 KΩ, 22 KΩ, R_i = 1.0 KΩ , 2.2 KΩ]

S. N.	Input voltage, V_{in} (volt)	Output voltage, V_{out} (volt)	Measured Gain (V_o/V_{in})	Average measured Gain	Gain (R_f/R_i) (theory.)
1					
2					
--					
5					

Use different combination of R_f and R_i to find out different gain of OPAMP. At least do experiment for 4 different Gain of OPAMP.

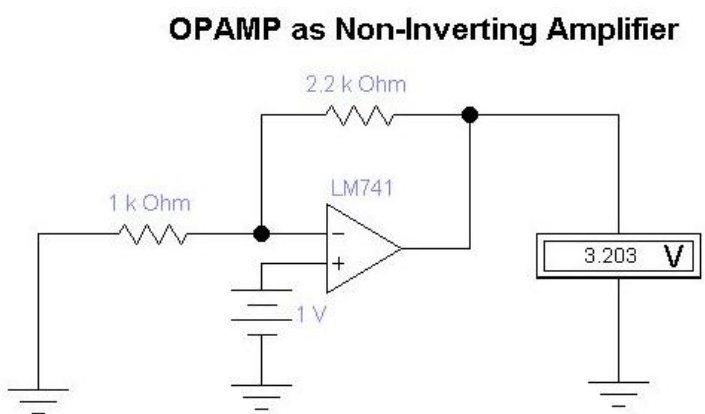

(3) OPAMP as an Adder:

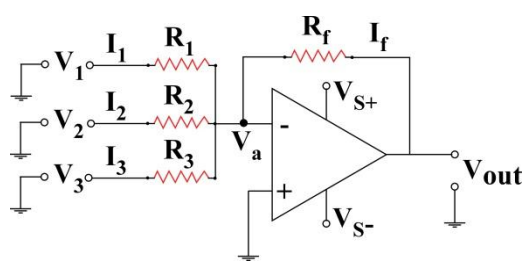

An OPAMP in an inverted amplifier configuration with two or three inputs can work as an adder circuit. The output voltage of an adder amplifier is proportional to the negative of the algebraic sum of its input voltages. Thus the output voltage is proportional to the algebraic sum of the input voltages. If variable voltage not available then one can use 1K pot from fixed voltage to get variable voltage. **If R_f = R1 = R2 = R3 = 1.0 KΩ** then the output voltage is

$$V_{out} = -(V_1 + V_2 + V_3)$$

Table 3: [$R_f = R_1 = R_2 = R_3 = 1.0$ KΩ, use three power supply to tune V_1, V_2 and V_3 from variable power supply]

S. N.	Input voltage, V_1 (volt)	Input voltage, V_2 (volt)	Input voltage, V_3 (volt)	Measured output voltage, V_{out} (volt)	Theoretical V_{out} (volt), $V_1 + V_2 + V_3$
1					
2					
--					
10					

Use different combination of V_1, V_2 and V_3 to find out OPAMP is working as an adder amplifier. At least do experiments for 10 different input voltages.

(4) OPAMP as a Subtractor:

An OPAMP can be used as a subtractor, and it subtract one signal from other. When resistors, $R_1 = R_2 = R_3 = R_4 = 1.0$ KΩ the circuit with OPAMP can be used as a subtractor. If variable voltage not available then one can use 1K pot from fixed voltage to get variable voltage.

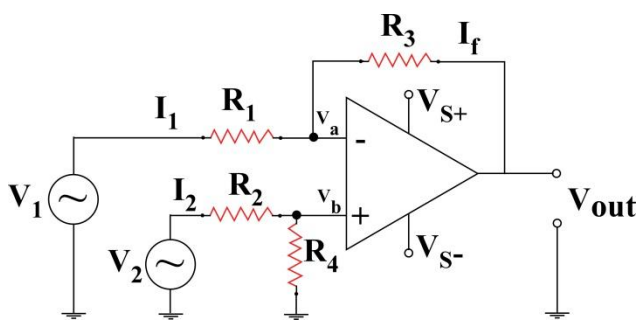

$$V_{out} = (V_2 - V_1)$$

Table 4: [$R_1 = R_2 = R_3 = R_4 = 1.0$ KΩ, use 2 voltage source to tune V_1 and V_2]

S. N.	Input voltage, V_1 (volt)	Input voltage, V_2 (volt)	Measured output voltage, V_{out} (volt)	Theoretical V_{out} (volt), $V_2 - V_1$
1				
2				
--				
10				

Use different combination of V_1 and V_2 to find out OPAMP is working as a subtractor amplifier. At least do experiments for 10 different input voltages.

***